BRECON
Cologne
Germany

BRECON
smart vibration technology



General catalog

Program 2026

External vibrators
Internal vibrators
Control systems
Accessories



SLIM2 Qiuck Release Vibrator

The absolute lightweight in its class

only 18,9kg at 14kN and 6000rpm*
up to 25% lighter than its competitors

Superb handling:

Easy change among moulds
e.g. 12 vibrators in 10-15 min

The best price/performance relationship

Supreme compaction quality despite low investment
SL version: lower noise level than comparable vibrators

Our Newsletter

BRECON GmbH - Telephone: +49-221-9544270, Fax: +49-221-9544277, info@brecon.de

BRECON
smart vibration technology

* BRECON external vibrators with SL characteristics (synchronous operation) precisely achieve the speed specified by the frequency control, e.g., 6,000 rpm at an electrical frequency of 100 Hz. These specifications apply to external vibrators that have the same characteristics as BRECON SL vibrators and are speed-adjustable. The SLIM2 quick-release mount can also be used with BRECON high-frequency and BRECON standard-frequency vibrators.

Index

1 External vibrators 4

750/900 1/min 4
1.000/1.200 1/min 5
1.500/1800 1/min 6
3.000 1/min 7
3.600 1/min 8
6.000 1/min 9
6.000 1/min SL 9
9.000 1/min 10
10.800 1/min 10
12.000 1/min 10
SLIM2-Quick release vibrator 11
Pneumatic 12

External vibrator accessories 13

Special bearing grease 13
Grease gun 13

2 Control systems 14

Electronic frequency converters 14
Mobile frequency converters (electronic) 15
Frequency converters (electro-mechanical) 15
Distribution boxes 16

Control system accessories 17

Radio controls 17
Large display indicators 17
CEE plug connections 18

3 Intenal vibrators 19

Intenal vibrators PROFI LINE 19
Spade grip vibrators PROFI LINE 19
Spare heads for PROFI LINE 20
Intenal vibrators INTEQ 21
Pneumatic internal vibrators 21
Mobile frequency converters (electro-mechanical) 22
Mobile frequency converters (electric) 23
Flexible shaft vibrators 24
Drive motors for flexible shaft vibrators 24

4 Special vibrators 25

Direct current external vibrators 25
ICF vibratos 25
Tamper 3.000/3.600 1/min 26
Accessories for tamping 26

5 Technical drawings 27

1 External vibrator

BRECON External vibrator 750/900 1/min, IP65

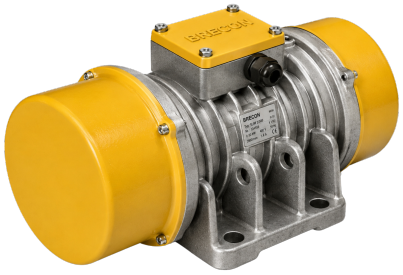

	Type	Centrifugal force [kN]	Working moment [kgcm]	Power [kW]	Voltage 3~ [V]	Nominal current [A]	Dimensions L x W x H [mm]	Mounting pattern l - b - d [mm]	Weight [kg]	Pic-ture
750 1/min, 50 Hz	18 144 102	6,9	222	0,90	220-240 / 380-415	3,50 / 2,00	548 x 280 x 258	140 x 190, 4x Ø17	62,5	D
	18 147 102	10,3	330	1,10	220-240 / 380-415	4,30 / 2,50	584 x 300 x 280	155 x 255, 4x Ø22	82,0	D
	18 153 102	15,8	512	2,00	220-240 / 380-415	8,60 / 5,00	662 x 330 x 331	155 x 255, 4x Ø25	140,0	D
	18 159 101	22,1	712	2,50	220-240 / 380-415	10,00 / 6,00	693 x 355 x 360	180 x 280, 4x Ø26	173,5	D
	18 163 102	26,5	860	3,00	220-240 / 380-415	11,70 / 3,80	693 x 355 x 360	180 x 280, 4x Ø26	187,0	D
	18 167 101	37,3	1.210	3,70	220-240 / 380-415	14,70 / 8,50	740 x 390 x 392	110 x 310, 6x Ø29	254,0	F
	18 171 101	46,6	1.510	5,20	220-240 / 380-415	17,50 / 10,00	851 x 390 x 414	100 x 320, 6x Ø28	300,0	F
	18 175 101	60,4	1.960	6,50	220-240 / 380-415	21,00 / 12,00	917 x 390 x 414	100 x 320, 6x Ø28	331,0	F
	18 178 101	74,0	2.394	7,00	220-240 / 380-415	22,50 / 13,00	1001 x 456 x 468	130 x 380, 6x Ø32	407,0	F
	18 181 101	84,3	2.734	8,00	220-240 / 380-415	24,50 / 14,00	1007 x 456 x 468	130 x 380, 6x Ø32	438,0	F
	18 186 101	110,8	3.600	10,00	380-405 / 660-700	18,00 / 10,50	1084 x 520 x 504	117 x 394, 6x Ø31	584,0	F
	18 189 101	133,9	4.340	11,00	380-405 / 660-700	20,00 / 11,50	1138 x 520 x 504	155 x 400, 6x Ø38	672,0	F
	18 192 101	182,4	5.920	13,50	380-405 / 660-700	26,00 / 15,00	1130 x 620 x 595	140 x 520, 8x Ø45	970,0	E
900 1/min, 60 Hz	18 144 113	9,4	222	0,95	220-240 / 440-480	4,00 / 2,00	548 x 280 x 258	140 x 190, 4x Ø17	62,5	D
	18 147 113	14,7	330	1,20	220-240 / 440-480	5,20 / 2,60	584 x 300 x 280	155 x 255, 4x Ø22	82,0	D
	18 153 113	22,8	512	2,30	220-240 / 440-480	10,00 / 5,00	662 x 330 x 331	155 x 255, 4x Ø25	140,0	D
	18 163 113	38,3	860	3,30	220-240 / 440-480	14,00 / 7,00	693 x 355 x 360	180 x 280, 4x Ø26	187,0	D
	18 167 113	45,3	1.020	4,10	220-240 / 440-480	17,00 / 8,50	740 x 390 x 392	110 x 310, 6x Ø29	241,5	F
	18 171 113	53,9	1.210	5,80	220-240 / 440-480	20,00 / 10,00	770 x 390 x 414	100 x 320, 6x Ø28	280,0	F
	18 175 113	70,1	1.580	7,20	220-240 / 440-480	24,00 / 12,00	839 x 390 x 414	100 x 320, 6x Ø28	308,0	F
	18 178 113	80,9	1.820	8,00	220-240 / 440-480	26,00 / 13,00	901 x 456 x 468	130 x 320, 6x Ø32	372,0	F
	18 181 113	107,9	2.430	8,50	220-240 / 440-480	28,00 / 14,00	907 x 456 x 468	130 x 380, 6x Ø32	428,0	F
	18 186 113	124,0	2.800	10,80	220-240 / 440-480	36,00 / 18,00	964 x 520 x 504	117 x 394, 6x Ø31	543,0	F
	18 189 113	156,9	3.540	12,00	220-240 / 440-480	40,00 / 20,00	1138 x 520 x 504	117 x 394, 6x Ø31	630,0	F
	18 192 113	217,7	4.900	14,50	220-240 / 440-480	56,00 / 26,00	1130 x 620 x 595	140 x 520, 8x Ø45	930,0	E

All vibrators also available for special voltage

External vibrator 1

BRECON External vibrator
1.000/1.200 1/min, IP65

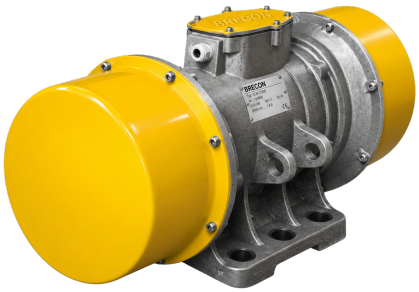

	Type	Centrifugal force [kN]	Working moment [kgcm]	Power [kW]	Voltage 3~ [V]	Nominal current [A]	Dimensions L x W x H [mm]	Mounting pattern l - b - d [mm]	Weight [kg]	Pic-ture
1.000 1/min, 50 Hz	18 137 701	5,7	104	0,80	220-240 / 380-415	3,00 / 1,70	452 x 225 x 233	120 x 180, 4x Ø17	37,0	D
	18 122 701	9,4	172	0,90	220-240 / 380-415	3,20 / 1,90	495 x 250 x 246	150 x 190, 4x Ø17	50,0	D
	18 125 721	12,6	222	1,00	220-240 / 380-415	3,60 / 2,10	548 x 280 x 258	160 x 200, 4x Ø17	62,5	D
	18 128 721	18,1	330	1,40	220-240 / 380-415	4,60 / 2,70	584 x 300 x 280	165 x 230, 4x Ø22	82,0	D
	18 130 702	28,0	512	2,40	220-240 / 380-415	9,00 / 5,20	662 x 330 x 331	155 x 255, 4x Ø25	140,0	D
	18 158 102	39,2	712	2,70	220-240 / 380-415	10,50 / 6,00	693 x 355 x 360	210 x 295, 4x Ø29	173,5	D
	18 162 101	47,1	860	3,30	220-240 / 380-415	12,00 / 7,00	693 x 355 x 360	180 x 280, 4x Ø26	187,0	D
	18 166 101	55,9	1.020	4,20	220-240 / 380-415	13,00 / 7,50	740 x 390 x 392	110 x 310, 6x Ø29	241,5	F
	18 170 101	66,7	1.210	5,30	220-240 / 380-415	16,50 / 9,50	770 x 390 x 414	200 x 320, 4x Ø28	280,0	F
	18 174 101	86,3	1.580	7,00	220-240 / 380-415	21,00 / 12,00	838 x 390 x 414	200 x 320, 4x Ø28	308,0	F
	18 177 101	100,0	1.820	8,00	220-240 / 380-415	26,00 / 15,00	901 x 456 x 468	130 x 380, 6x Ø32	372,0	F
	18 180 101	124,5	2.270	9,80	220-240 / 380-415	28,00 / 16,00	907 x 456 x 468	130 x 380, 6x Ø32	412,0	F
	18 183 101	133,4	2.430	10,20	220-240 / 380-415	30,00 / 17,00	907 x 456 x 468	130 x 380, 6x Ø32	428,0	F
	18 185 101	153,5	2.800	11,50	380-405 / 660-700	21,00 / 12,00	964 x 520 x 504	155 x 400, 6x Ø38	543,0	F
	18 188 101	172,1	3.140	13,80	380-405 / 660-700	24,00 / 13,80	1018 x 520 x 504	155 x 400, 6x Ø38	610,0	F
	18 190 101	223,6	4.080	19,00	380-405 / 660-700	31,00 / 18,00	1130 x 620 x 595	140 x 520, 8x Ø45	890,0	E
1.200 1/min, 60 Hz	18 137 713	7,2	92	0,90	220-240 / 440-480	3,20 / 1,60	452 x 225 x 233	120 x 180, 4x Ø17	36,0	D
	18 122 713	10,8	136	1,00	220-240 / 440-480	3,40 / 1,70	495 x 250 x 246	150 x 190, 4x Ø17	46,0	D
	18 125 723	13,2	165	1,15	220-240 / 440-480	3,80 / 1,90	486 x 280 x 258	160 x 200, 4x Ø17	56,0	D
	18 128 723	17,1	220	1,55	220-240 / 440-480	5,00 / 2,50	512 x 300 x 280	165 x 230, 4x Ø22	70,0	D
	18 130 713	25,0	316	2,60	220-240 / 440-480	10,00 / 5,00	662 x 330 x 331	155 x 255, 4x Ø25	124,0	D
	18 158 113	33,3	420	2,90	220-240 / 440-480	12,00 / 6,00	693 x 355 x 360	210 x 295, 4x Ø29	153,0	D
	18 162 113	46,5	590	3,60	220-240 / 440-480	14,00 / 7,00	693 x 355 x 360	180 x 280, 4x Ø26	167,0	D
	18 166 113	57,9	734	4,50	220-240 / 440-480	15,00 / 7,50	740 x 390 x 392	110 x 310, 6x Ø29	221,0	F
	18 170 113	64,7	820	6,20	220-240 / 440-480	20,00 / 10,00	770 x 390 x 414	115 x 320, 6x Ø29	255,0	F
	18 174 113	86,8	1.100	7,50	220-240 / 440-480	24,00 / 12,00	838 x 390 x 414	115 x 320, 6x Ø29	280,0	F
	18 177 113	103,0	1.300	8,60	220-240 / 440-480	27,60 / 13,80	901 x 456 x 468	130 x 380, 6x Ø32	337,0	F
	18 180 113	118,6	1.500	10,80	220-240 / 440-480	34,00 / 17,00	907 x 456 x 468	130 x 380, 6x Ø32	364,0	F
	18 183 113	130,9	1.654	11,00	220-240 / 440-480	35,00 / 17,50	907 x 456 x 468	130 x 380, 6x Ø32	380,0	F
	18 185 113	156,4	1.980	12,50	220-240 / 440-480	37,00 / 18,50	964 x 520 x 504	155 x 400, 6x Ø38	500,0	F
	18 188 113	168,7	2.140	15,00	220-240 / 440-480	47,00 / 23,50	1018 x 520 x 504	155 x 400, 6x Ø38	555,0	F
	18 190 113	191,2	2.420	20,50	220-240 / 440-480	62,00 / 31,00	1130 x 620 x 550	140 x 520, 8x Ø45	850,0	E

All vibrators also available for special voltage

1 External vibrator

BRECON External vibrator 1.500/1.800 1/min, IP65



	Type	Centrifugal force [kN]	Working moment [kgcm]	Power [kW]	Voltage 3~ [V]	Nominal current [A]	Dimensions L x W x H [mm]	Mounting pattern l - b - d [mm]	Weight [kg]	Pic-ture
1.500 1/min, 50 Hz	18 133 202[1]	1,0	8	0,15	220-260 / 380-440	0,55 / 0,32	270 x 165 x 125	115 x 135, 4x Ø10,5	7,4	B
	18 119 202	3,0	24	0,25	220-260 / 380-440	0,90 / 0,52	270 x 165 x 180	90 x 125, 4x Ø13	13,4	C
	18 136 721	5,9	48	0,45	220-240 / 380-415	1,50 / 0,90	406 x 194 x 204	90 x 154, 4x Ø13	23,5	D
	18 121 722	11,2	92	0,95	220-240 / 380-415	3,00 / 1,80	428 x 225 x 233	100 x 200, 4x Ø17	36,0	D
	18 124 701	16,7	136	1,10	220-240 / 380-415	3,50 / 2,00	461 x 250 x 246	150 x 190, 4x Ø17	46,0	D
	18 127 702	20,6	165	1,30	220-240 / 380-415	4,00 / 2,30	486 x 280 x 258	160 x 200, 4x Ø17	56,0	D
	18 129 702	27,1	220	1,75	220-240 / 380-415	5,00 / 3,00	512 x 300 x 280	165 x 230, 4x Ø22	70,0	D
	18 139 102	30,9	250	2,00	220-240 / 380-415	6,00 / 3,80	584 x 300 x 280	165 x 230, 4x Ø22	80,0	D
	18 151 102	39,2	316	2,40	220-240 / 380-415	8,70 / 5,00	568 x 330 x 331	155 x 255, 4x Ø25	118,0	D
	18 157 102	51,9	420	3,50	220-240 / 380-415	10,50 / 6,00	609 x 355 x 360	180 x 280, 4x Ø26	152,5	D
	18 165 101	56,9	460	4,50	220-240 / 380-415	13,00 / 7,50	656 x 390 x 392	110 x 310. 6x Ø29	201,5	F
	18 169 101	69,1	560	6,00	220-240 / 380-415	19,00 / 11,00	686 x 390 x 414	100 x 320, 6x Ø28	233,0	F
	18 173 101	83,3	676	7,10	220-240 / 380-415	20,50 / 12,00	672 x 390 x 414	100 x 320, 6x Ø28	248,0	F
	18 176 101	93,1	760	7,80	220-240 / 380-415	21,50 / 12,50	731 x 456 x 468	125 x 380,6x Ø32	306,0	F
	18 179 101	119,6	970	10,50	220-240 / 380-415	30,50 / 17,50	737 x 456 x 468	130 x 380,6x Ø32	337,0	F
1.800 1/min, 60 Hz	18 133 214[1]	1,0	6	0,15	220-265 / 380-460	0,55 / 0,32	270 x 165 x 125	115 x 135, 4x Ø10,5	7,4	B
	18 119 214	3,0	17	0,25	220-265 / 380-460	0,95 / 0,55	270 x 160 x 180	90 x 125, 4x Ø13	13,4	C
	18 136 723	6,3	36	0,50	220-275 / 380-480	1,40 / 0,80	406 x 194 x 204	90 x 154, 4x Ø13	21,0	D
	18 121 723	10,9	62	1,00	220-275 / 380-480	3,00 / 1,70	428 x 225 x 233	100 x 200, 4x Ø17	32,5	D
	18 124 713	17,6	100	1,20	220-275 / 380-480	3,30 / 1,90	461 x 250 x 246	150 x 190, 4x Ø17	41,5	D
	18 127 714	19,6	110	1,40	220-275 / 380-480	3,80 / 2,20	486 x 280 x 258	160 x 200, 4x Ø17	50,5	D
	18 129 714	28,4	160	1,90	220-275 / 380-480	4,90 / 2,80	512 x 300 x 280	165 x 230, 4x Ø22	67,5	D
	18 139 114	32,9	186	2,10	220-275 / 380-480	6,00 / 3,50	512 x 300 x 280	165 x 230, 4x Ø22	74,0	D
	18 151 114	42,6	240	2,60	220-275 / 380-480	8,30 / 4,80	568 x 330 x 331	155 x 255, 4x Ø25	110,0	D
	18 157 113	54,9	310	3,80	220-275 / 380-480	10,00 / 6,00	609 x 355 x 360	180 x 280, 4x Ø26	144,0	D
	18 165 113	60,8	340	5,00	220-275 / 380-480	13,00 / 7,50	656 x 390 x 392	110 x 310, 6x Ø29	196,0	F
	18 173 113	83,3	470	7,30	220-275 / 380-480	19,00 / 11,00	672 x 390 x 414	100 x 320, 6x Ø28	233,0	F
	18 176 113	94,1	530	8,40	220-275 / 380-480	21,00 / 12,00	731 x 456 x 468	125 x 380, 6x Ø32	289,0	F
	18 179 113	127,4	716	11,00	220-275 / 380-480	28,00 / 16,00	737 x 456 x 468	130 x 380, 6x Ø32	322,0	F

[1] alternative mounting pattern: l=65; b= 140; d= 4x Ø13 included

All vibrators also available for special voltage

External vibrator 1

BRECON External vibrator
3.000 1/min, IP65

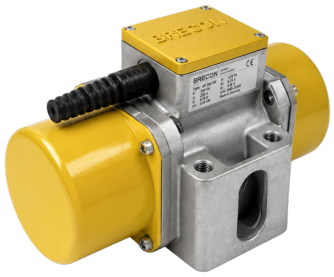

	Type	Centrifugal force [kN]	Working moment [kgcm]	Power [kW]	Voltage 3~ [V]	Nominal current [A]	Dimensions L x W x H [mm]	Mounting pattern l - b - d [mm]	Weight [kg]	Pic-ture
3.000 1/min, 50 Hz	18 131 102	0,4	0,8	0,07	220-260 / 380-440	0,26 / 0,15	172 x 72 x 80	45 x 45, 4x M6	2,7	A
	18 100 202[1]	1,2	2,4	0,15	220-260 / 380-440	0,47 / 0,27	198 x 165 x 125	115 x 135, 4x Ø10,5	4,7	B
	18 132 202[1,2]	2,6*	5,2	0,15	220-260 / 380-440	0,47 / 0,27	235 x 165 x 125	115x 135, 4x Ø10,5	5,9	B
	18 117 202	3,0	6	0,30	220-260 / 380-440	1,10 / 0,64	260 x 160 x 165	90 x 125, 4x Ø13	10,0	C
	18 118 202	5,0	10	0,34	220-260 / 380-440	1,16 / 0,67	300 x 160 x 165	90 x 125, 4x Ø13	10,2	C
	18 134 102	7,0	14	0,52	220-260 / 380-440	1,73 / 1,00	295 x 190 x 185	90 x 154, 4x Ø13	16,5	C
	18 134 517	7,1	14	0,52	220-260 / 380-440	1,73 / 1,00	295 x 150 x 185	108 x 125, 4x Ø13	15,5	C
	18 135 102	9,0	18	0,63	220-260 / 380-440	2,00 / 1,15	325 x 190 x 185	90 x 154, 4x Ø13	17,5	C
	18 135 508	9,0	18	0,60	220-260 / 380-440	2,00 / 1,15	325 x 150 x 185	108 x 125, 4x Ø13	17,5	C
	18 120 202	14,0	28	1,00	220-260 / 380-440	3,20 / 1,85	370 x 250 x 220	100 x 200, 4x Ø17	29,0	C
	18 123 202	18,0	36	1,30	220-260 / 380-440	4,20 / 2,40	370 x 250 x 220	100 x 200, 4x Ø17	34,0	C
	18 123 299	20,0	40	1,30	220-260 / 380-440	4,20 / 2,40	370 x 250 x 220	100 x 200, 4x Ø17	40,0	C
	18 123 542	24,0	48	1,30	220-260 / 380-440	4,20 / 2,40	370 x 250 x 220	100 x 200, 4x Ø17	39,0	C
	18 126 202	28,0	56	2,20	220-260 / 380-440	7,00 / 4,00	490 x 330 x 340	140 x 248, 4x Ø22	95,0	C
	18 150 102	42,0	84	3,50	220-240 / 380-415	10,00 / 5,80	568 x 330 x 331	155 x 255, 4x Ø25	100,5	D
	18 156 101	55,2	112	5,00	220-230 / 380-400	13,80 / 8,00	609 x 355 x 360	180 x 280, 4x Ø26	130,0	D
	18 164 101	65,1	132	7,00	220-230 / 380-400	19,80 / 11,50	656 x 390 x 392	110 x 310, 6x Ø29	182,5	F
	18 168 101	74,5	150	8,00	220-230 / 380-400	22,40 / 13,00	686 x 390 x 414	115 x 320, 6x Ø29	210,0	F
	18 172 101	93,6	190	9,00	220-230 / 380-400	25,00 / 14,50	672 x 390 x 414	110 x 310, 6x Ø29	216,0	F

[1] alternative mounting pattern: l=65; b= 140; d= 4x Ø13 included
[2] alternative mounting pattern: l=90; b= 125; d= 4x Ø13 included
* only for short time operation

All vibrators also available for special voltage

1 External vibrator

BRECON External vibrator
3.600 1/min, IP65

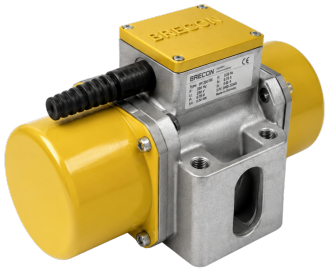

	Type	Centrifugal force [kN]	Working moment [kgcm]	Power [kW]	Voltage 3~ [V]	Nominal current [A]	Dimensions L x W x H [mm]	Mounting pattern l - b - d [mm]	Weight [kg]	Pic-ture
3.600 1/min, 60 Hz	18 131 115	0,4	0,6	00,7	220-265 / 380-460	0,26 / 0,15	172 x 72 x 80	45 x 45, 4x M6	2,7	A
	18 100 214[1]	1,5	2	0,15	220-265 / 380-460	0,47 / 0,27	198 x 165 x 125	115 x 135, 4x Ø10,5	4,7	B
	18 132 214[1,2]	2,6*	3,8	0,15	220-265 / 380-460	0,36 / 0,21	235 x 165 x 125	115 x 135, 4x Ø10,5	5,1	B
	18 117 214	3,0	4,2	0,30	220-265 / 380-460	1,10 / 0,64	260 x 160 x 165	90 x 125, 4x Ø13	9,3	C
	18 118 214	5,0	7	0,34	220-265 / 380-460	1,21 / 0,70	300 x 160 x 165	90 x 125, 4x Ø13	11,0	C
	18 134 518	7,0	9,7	0,52	220-265 / 380-460	1,90 / 1,10	295 x 190 x 185	108 x 125, 4x Ø13	17,5	C
	18 134 114	7,0	9,7	0,52	220-265 / 380-460	1,90 / 1,10	295 x 190 x 185	90 x 154, 4x Ø13	16,5	C
	18 135 114	9,0	12	0,63	220-265 / 380-460	2,20 / 1,30	325 x 190 x 185	90 x 154, 4x Ø13	18,2	C
	18 135 511	9,0	12	0,63	220-265 / 380-460	2,20 / 1,30	325 x 150 x 185	108 x 125, 4x Ø13	17,5	C
	18 120 214	14,0	19,5	1,00	220-265 / 380-460	3,20 / 1,90	370 x 250 x 220	100 x 200, 4x Ø17	29,0	C
	18 123 214	18,0	25	1,30	220-265 / 380-460	4,25 / 2,50	370 x 250 x 220	100 x 200, 4x Ø17	31,0	C
	18 123 540	24,0	33,6	1,55	220-265 / 380-460	4,00 / 2,30	370 x 250 x 220	100 x 200, 4x Ø17	39,0	C
	18 126 216	27,0	39,0	2,20	220-265 / 380-460	6,40 / 3,70	490 x 330 x 340	170 x 248, 4x Ø23	95,0	C
	18 150 114	49,0	70	4,00	220-275 / 380-480	9,80 / 5,80	568 x 330 x 331	155 x 255, 4x Ø25	98,5	D
	18 156 113	55,9	80	5,50	220-275 / 380-480	13,60 / 8,00	609 x 355 x 360	180 x 280, 4x Ø26	126,5	D
	18 164 113	61,8	88	7,30	220-275 / 380-480	18,70 / 11,00	656 x 390 x 392	110 x 310, 6x Ø29	178,0	F
	18 168 113	78,0	110	8,50	220-275 / 380-480	21,25 / 12,50	686 x 390 x 414	115 x 320, 6x Ø29	206,0	F
	18 172 113	92,1	130	9,50	220-275 / 380-480	23,80 / 14,00	672 x 390 x 414	115 x 320, 6x Ø29	210,0	F

[1] alternative mounting pattern: l=65; b= 140; d= 4x Ø13 included
[2] alternative mounting pattern: l=90; b= 125; d= 4x Ø13 included
* only for short time operation

All vibrators also available for special voltage

External vibrator 1

BRECON External vibrator 6.000 1/min, IP65



	Type	Centrifugal force [kN]	Power [kW]	Frequency [Hz]	Voltage 3~ [V]	Nominal current [A]	Dimensions L x W x H [mm]	Mounting pattern l - b - d [mm]	Weight [kg]	Pic-ture
6.000 1/min	18 212 203	8,0	0,68	200	250	2,10	260 x 160 x 165	90 x 125, 4x Ø13	9,4	C
	18 212 209	8,0	0,68	200	42	12,60	260 x 160 x 165	90 x 125, 4x Ø13	8,8	C
	18 220 203	10,0	1,00	200	250	3,20	295 x 190 x 185	90 x 154, 4x Ø13	15,5	C
	18 220 209	10,0	1,00	200	42	19,00	295 x 190 x 185	90 x 154, 4x Ø13	18,0	C
	18 220 251*	10,0	1,00	200	250	3,20	295 x 147 x 185	65 x 125, 4x Ø13	14,5	C
	18 220 508	10,0	1,00	200	250	3,20	295 x 150 x 185	108 x 125, 4x Ø13	13,5	C
	18 221 203	12,0	1,20	200	250	3,60	295 x 190 x 185	90 x 154, 4x Ø13	15,9	C
	18 221 251*	12,0	1,20	200	250	3,60	295 x 147 x 185	65 x 125, 4x Ø13	15,5	C
	18 221 507	12,0	1,20	200	250	3,60	295 x 150 x 185	108 x 125, 4x Ø13	14,0	C
	18 221 205	14,0	1,20	200	250	3,60	295 x 190 x 185	90 x 154, 4x Ø12	16,0	C
	18 221 209	14,0	1,20	200	42	21,50	295 x 190 x 185	90 x 154, 4x Ø12	15,0	C
	18 221 210	14,0	1,20	200	42	21,50	295 x 147 x 185	120 x 120, 4xØ17	15,0	C
	18 221 207	14,0	1,20	200	250	3,60	295 x 147 x 185	120 x 120, 4x Ø17	14,0	C
	18 221 523	14,0	1,10	100	380	2,20	295 x 150 x 185	108 x 125, 4x Ø13	14,0	C
	18 221 508	14,0	1,20	200	250	3,60	295 x 150 x 185	108 x 125, 4x Ø13	14,0	C
	18 215 203	16,0	2,00	200	250	5,70	350 x 250 x 220	100 x 200, 4x Ø17	26,5	C
	18 217 203	18,0	2,40	200	250	7,50	370 x 250 x 220	100 x 200, 4x Ø17	27,0	C
	18 218 203	20,0	2,60	200	250	7,90	370 x 250 x 220	100 x 200, 4x Ø17	27,5	C
	18 223 742	25,0	2,25	100	380-415	4,60	415 x 245 x 247	150 x 190, 4x Ø17	42,0	C
	18 226 742	32,4	2,50	100	380-415	5,00	410 x 280 x 258	160 x 200, 4x Ø17	43,0	C

* Schmalbau

BRECON Synchronous vibrators SL 6.000 1/min, IP65



	Type	Centrifugal force [kN]	Power [kW]	Voltage 3~ [V]	Nominal current [A]	Dimensions L x W x H [mm]	Mounting pattern l - b - d [mm]	Weight [kg]	Pic-ture
6.000 1/min, 100 Hz	18 220 358	10,0	0,60	380	2,30	295 x 150 x 185	108 x 125, 4x Ø13	15,0	C
	18 220 359	10,0	0,60	220	3,90	295 x 150 x 185	108 x 125, 4x Ø13	15,0	C
	18 220 351*	12,0	0,60	380	2,30	395 x 147 x 185	65 x 125, 4x Ø13	16,2	C
	18 221 358	14,0	0,60	380	2,30	295 x 150 x 185	108 x 125, 4x Ø13	15,0	C
	18 221 359	14,0	0,60	220	3,90	295 x 150 x 185	108 x 125, 4x Ø13	15,5	C
	18 221 305	14,0	0,60	380	2,30	295 x 190 x 185	90 x 154, 4x Ø13	15,0	C
	18 221 307*	14,0	0,60	380	2,30	295 x 147 x 185	120 x 120, 4x Ø17	15,0	C

* Slim version

All vibrators also available for special voltage

1 External vibrator

BRECON External vibrator 9.000/10.800/12.000 1/min, IP65



Type	Centrifugal force [kN]	Power [kW]	Voltage 3~ [V]	Nominal current [A]	Dimensions L x W x H [mm]	Mounting pattern l - b - d [mm]	Weight [kg]	Pic-ture
9.000 1/min, 150 Hz								
18 219 212	10,0 (8,0)*	1,20	42	18,30	295 x 190 x 185	90 x 154, 4x Ø13	14,0	C
18 213 505	16,0 (13,5)*	1,80	250	4,70	360 x 250 x 220	100 x 200, 4x Ø17	25,0	C
18 213 112	16,0 (13,5)*	1,80	42	28,00	360 x 250 x 220	100 x 200, 4x Ø17	25,0	C
18 216 502	18,0 (15,0)*	2,30	190	8,20	370 x 250 x 220	100 x 200, 4x Ø17	26,0	C
10.800 1/min, 180 Hz								
18 219 215	10,0 (8,0)*	1,20	230	4,30	295 x 190 x 185	90 x 154, 4x Ø13	16,0	C
18 219 516	12,0 (8,0)*	1,20	46	18,30	295 x 190 x 185	90 x 154, 4x Ø13	16,0	C
18 216 215	18,0 (15,0)*	2,80	230	8,10	370 x 250 x 220	100 x 200, 4x Ø17	26,0	C
12.000 1/min, 200 Hz								
18 219 203	10,0 (8,0)*	1,50	250	4,10	295 x 190 x 185	90 x 154, 4x Ø13	14,0	C
18 213 203	14,0 (12,5)*	2,40	250	6,50	360 x 250 x 220	100 x 200, 4x Ø17	26,0	C
18 216 203	18,0 (15,0)*	3,10	250	8,20	370 x 250 x 220	100 x 200, 4x Ø17	26,0	C

* Values in parentheses are recommended for use of 8 hours or more

All vibrators also available for special voltage

External vibrator 1

BRECON SLIM2-Quick release vibrators 3.000/3.600/6.000 1/min, IP65

Type	Centrifugal force [kN]	Power [kW]	Voltage 3~ [V]	Nominal current [A]	Dimensions L x W x H [mm]	Weight [kg]
3.000 1/min, 50 Hz						
18 117 561	3,0	0,30	220-260 / 380-440	1,10 / 0,64	260 x 160 x 165	15,0
18 118 561	5,0	0,34	220-260 / 380-440	1,16 / 0,67	300 x 160 x 165	15,0
18 134 521	7,0	0,52	220-260 / 380-440	1,73 / 1,00	295 x 150 x 185	16,5
18 135 513	9,0	0,63	220-260 / 380-440	2,00 / 1,15	325 x 150 x 185	20,0
3.600 1/min, 60 Hz						
18 117 562	3,0	0,30	220-265 / 380-460	1,10 / 0,64	260 x 160 x 165	14,0
18 118 526	5,0	0,44	220-265 / 380-460	1,21 / 0,70	300 x 160 x 165	16,0
18 134 562	7,0	0,52	220-265 / 380-460	1,90 / 1,10	295 x 150 x 185	22,0
18 135 514	9,0	0,63	220-265 / 380-460	2,20 / 1,30	325 x 150 x 185	20,1
6.000 1/min, 100 Hz						
18 220 519	10,0	1,20	220 / 380	3,90 / 2,40	295 x 150 x 185	17,7
18 221 505	12,0	1,20	220 / 380	3,90 / 2,40	295 x 150 x 185	18,7
18 221 519	14,0	1,20	220 / 380	3,90 / 2,40	295 x 150 x 185	18,7
6.000 1/min, 200 Hz						
18 212 503	8,0	0,68	250	2,10	295 x 190 x 185	16,0
18 212 507	8,0	0,68	42	12,60	295 x 190 x 185	16,0
18 220 515	10,0	1,00	250	3,20	295 x 150 x 185	17,7
18 220 516	10,0	1,00	42	19,00	295 x 150 x 185	17,7
18 221 515	14,0	1,20	250	3,60	295 x 190 x 185	18,7
18 221 518	14,0	1,20	42	21,50	295 x 190 x 185	18,7

Equiped with BRECON quick mount system SLIM2 with 2 fixing screws and 2 handles; Including 1 m connection cable and CEE plug

Type	Dimensions L x W x H [mm]	Weight [kg]
Quick release system SLIM2		
SLIM2-116BW	216 x 60 x 25	3,5



All vibrators also available for special voltage

1 External vibrator

BRECON External vibrator - Pneumatic with silencer



Type.	Centrifugal force [kN]	Shifting [mm]	Rotational speed [1/min]	Free air [l/min]	Dimensions [mm] A	B	C	Weight [kg]
18 250 001	25,0	3,5	9.000	1.450	234	240	175	15,0
18 400 001	40,0	2,1	13.000	1.630	234	240	175	16,0
18 450 001	45,0	6,7	8.500	1.660	234	240	175	18,5
18 600 001	60,0	3,1	11.000	1.840	234	240	175	17,5

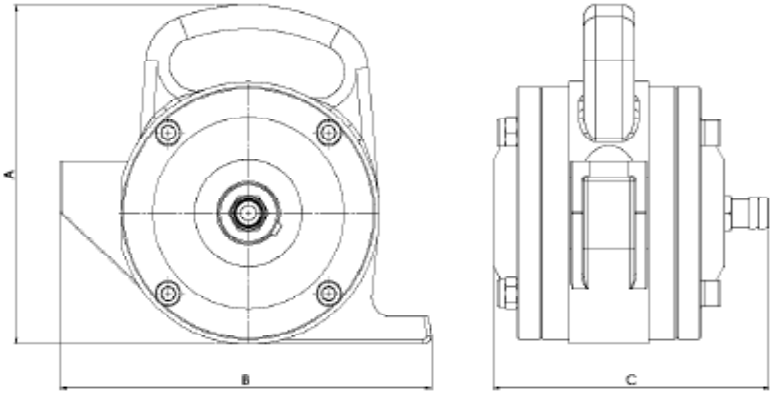

Type.	Dimensions [mm] A	B	C	D	E	Weight [kg]
Quick release system for pneumatic vibrators						
97-1061	240	100	70	130	34	5,0



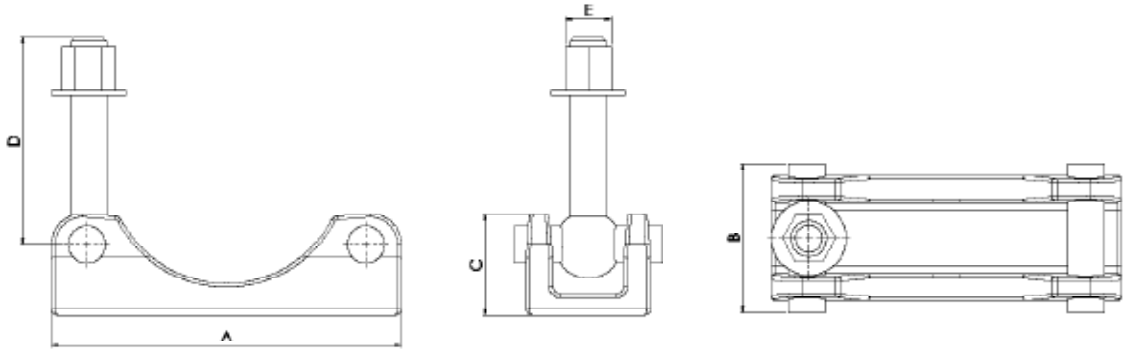

All vibrators also available for special voltage

External vibrator - Accessories

1

BRECON Accessories



Type	Quantity	Remarks
Special bearing grease		
EW560/2314	250 g tube	Special bearing grease (from -15° C to 100° C, short time 120° C)
EW560/2352	400 g cartridge	
EW560/2315	1.000 g can	



Type	Remarks
Grease gun	
EW560/2470	Grease gun with hollow and pointed nozzles

2 Control systems

BRECON Frequency converters elektronisch, Frequency range 0-200 Hz, IP54



Type	Secondary				Primary		Weight	Dimensions H x B x T
	Power output with 250 V / 200 Hz	Voltage at 200 Hz 3 ~	Continous current	Peak current (60s)	Voltage at 50/60 Hz 3 ~	Current		
	[kVa]	[V]	[A]	[A]	[V]	[A]	[kg]	[mm]
EW577-4E5	4,00	250	9,50	14,00	400	13,50	25,0	500 x 500 x 210
EW577-5E5	5,50	250	14,00	21,00	400	19,50	25,0	500 x 500 x 210
EW577-7E5	7,50	250	18,50	27,00	400	25,00	35,0	600 x 600 x 250
EW577-11E5	11,00	250	25,00	37,00	400	32,00	38,5	600 x 600 x 250
EW577-15E5	15,00	250	32,00	48,00	400	40,00	68,0	760 x 760 x 300
EW577-18E5	18,50	250	38,00	57,00	400	47,00	68,0	760 x 760 x 300
EW577-22E5	22,00	250	45,00	67,00	400	51,00	68,0	760 x 760 x 300
EW577-30E5	30,00	250	60,00	90,00	400	70,00	78,0	760 x 760 x 300
EW577-37E5	37,00	250	75,00	112,00	400	80,00	75,0	760 x 760 x 300

Frequency converters with higher output power available on request

Electronically adjustable digital frequency converter, in modular design, high pulse frequency, sinusoidal output current, digital frequency indicator for stepless frequency changing for external vibrators, automatic current limiting, short circuit proof, filtered ventilation, secondary motor choke, mounted in steel-sheet cabinet.

Control systems 2

BRECON Mobile frequency converters electronic, with integrated distribution panel, IP54



Type	Frequency converters					Number of motor protection switches	Settings range	Transport	Weight
	Secondary			Primary					
	Power output with 250 V /200 Hz	Conti-nuous current	Peak current (60 s)	Voltage at 50/60 Hz 3 ~	Cur-rent				
	[kW]	[A]	[A]	[V]	[A]		[A]		[kg]
EW560/2937*	4,00	9,40	14,10	400	5,80	2 external toggle switch	2,50 - 4,00	handle bar	45,0
EW560/2877**	7,50	17,00	25,50	400	18,50	4 with function lights	2,50 - 4,00	trolley	65,0
EW560/2801**	15,00	30,00	45,00	400	27,00	7 with function lights	2,50 - 4,00	trolley	75,0
EW560/2833**	18,50	42,00	63,00	400	41,00	9 with function lights	2,50 - 4,00	trolley	95,0
EW560/2834**	22,00	47,00	70,50	400	54,00	11 with function lights	2,50 - 4,00	trolley	105,0

Electronically adjustable electronic frequency converter, in modular design, high pulse frequency, sinusoidal output current
* Potentiometer for continuous frequency changing
** Digital frequency indicator for continuous frequency changing for external vibrators, automatic current limitingm short circuit proof, filtered ventilation secondary motor choke, mounted in steel-cabinet

BRECON Frequency converters electro-mechanical, 200 Hz, IP54

Type	Secondary			Primary			Weight
	Energy output cos = 0,8	Voltage	Full load current	Power	Voltage at 50 Hz	Full load current	
	[kVa]	[V]	[A]	[kVa]	[V]	[A]	[kg]
0 615 118 262	7,50 (9,50)*	250	17,30	11,00	400	16,80	78,0
0 615 119 262	11,00 (13,50)*	250	25,30	14,80	400	22,50	96,0
0 615 114 262	15,00 (19,00)*	250	34,60	17,00	400	25,70	166,0
0 615 116 262	20,00 (25,00)*	250	47,00	23,70	400	36,00	190,0
0 615 117 262	25,00 (30,00)*	250	58,00	30,60	400	46,50	240,0
0 615 115 262	30,00 (36,00)*	250	70,00	34,40	400	52,00	240,0

* Values in parantheses are valid for short time operation
Other outputs available on request

2 Control systems

BRECON Standard distribution boxes permanent installation, IP54



Type	On/Off switch with motor protction*	Group switch	Weight [kg]	Dimensions L x W x H [mm]	Remarks
SV020004	2	0	9,0	380 x 380 x 210	Adjustment range of the motor protection switch: 2,5 - 4,0 A These motor protection switches are also available in: 1,6 - 2,5 A, 4,0 - 6,3 A, 6,3 - 10,0 A, 10,0 - 16,0 A Modular design; steel-sheet cabinet; motor protection switch with toggle switch; connection trough large terminal strip;
SV020104	2	1	9,0	380 x 380 x 210	
SV030004	3	0	9,0	380 x 380 x 210	
SV030104	3	1	9,0	380 x 380 x 210	
SV040004	4	0	10,0	380 x 380 x 210	
SV040104	4	1	10,0	380 x 380 x 210	
SV050004	5	0	12,0	380 x 380 x 210	
SV050104	5	1	12,0	380 x 380 x 210	
SV060004	6	0	13,0	380 x 380 x 210	
SV060104	6	1	13,0	380 x 380 x 210	
SV060204	6	2	13,0	380 x 380 x 210	
SV070004	7	0	16,0	380 x 380 x 210	
SV070204	7	2	16,0	380 x 380 x 210	
SV080004	8	0	17,0	380 x 380 x 210	
SV080204	8	2	17,0	380 x 380 x 210	
SV090004	9	0	19,0	600 x 380 x 210	
SV090204	9	2	19,0	600 x 380 x 210	
SV090304	9	3	19,0	600 x 380 x 210	
SV100004	10	0	19,0	600 x 380 x 210	
SV100204	10	2	19,0	600 x 380 x 210	
SV110204	11	2	22,0	600 x 380 x 210	
SV110304	11	3	22,0	600 x 380 x 210	
SV120004	12	0	23,0	600 x 380 x 210	
SV120204	12	2	23,0	600 x 380 x 210	
SV120304	12	3	23,0	600 x 380 x 210	

* Thermal and short circuit tripping of breakers
Distribution boxes with additional On / Off switches and group switch combinations are available

Control system accessories 2

BRECON Radio controls



Type	Equipment	Remarks	Dimensions [mm]	Weight [kg]
EW560/3459	3 channels 2 transmitters 1 receiver	Transmitter frequency: 2,4 GHz Transmitter energy: 1 x 10^{-3} W Supply voltage transmitter: 3x 1,50 V, Typ AAA receiver: 230 V / 50 Hz Output receiver: Potential-free relay contact per channel; breaking capacity 230 V / 5 A	Transmitter: 110 x 75 x 25 Receiver: 120 x 115 x 50	0,15 0,70
EW560/3462	6 channels 2 transmitters 1 receiver			
EW560/3464	8 channels 2 transmitters 1 receiver			
More on request				

BRECON Large display indicators



Type	Supply voltage	Signal input	Dimensions H x B x T [mm]	Remarks	Weight [kg]
EW560/2188	220 V / 50 Hz	0 - 10 V	250 x 350 x 110	1 field indicator, 3 characters, LED (red), non reflective, adjustable display	7,0
EW560/2189	220 V / 50 Hz	0 - 10 V	250 x 480 x 240	2 field indicator, 3 characters, LED (red), non reflective, adjustable display	9,0

2 Control system accessories

BRECON CEE plug connections for frequencies of 100-300 Hz, DIN 49 462/63 and DIN 49 465

Type	Voltage [V]	Load capacity [A]	Identifi cation	Pictures (show 250 V versions)
1 614 482 048	250	16	HF plug 3P + 10h, green	
1 614 482 049	250	32		
1 614 482 050	42	32	HF plug 3P 4h, green	
1 614 482 062	42	63		
1 614 484 010	250	16	HF coupler socket 3P + 10h, green	
1 614 484 011	250	32		
1 614 484 012	42	32	HF coupler socket 3P 4h, green	
1 614 484 016	42	63		
1 614 485 024	250	16	HF wall socket 3P + 10h, green	
1 614 485 025	250	32		
1 614 485 026	42	32	HF wall socket 3P 4h, green	
1 614 485 035	42	63		
1 614 485 031	250	16	HF socket for external mounting 3P + 10h, green	
1 614 485 032	250	32		
1 614 485 033	42	32	HF socket for external mounting 3P 4h green	
1 614 485 034	42	63		
1 614 482 056	250	32	HF attachment plug 3P + 10h, green	

Internal vibrator 3

BRECON Internal vibrators PROFI LINE 200 Hz, 42 V or 250 V



Type	Head diameter [mm]	Head lenght [mm]	Nominal current [A]	Voltage [V]		Power [kW]	Weight [kg]
18 031 001	31	330	10,00	42	200 Hz, 12.000 1/min	0,75	10,0
18 038 601*	38	310	4,00	42		0,27	10,0
18 050 601*	50	360	10,00	42		0,60	14,5
18 058 601*	58	370	14,00	42		0,83	16,0
18 065 601*	65	380	18,00	42		1,10	20,0
18 080 001	80	450	55,00	42		4,00	30,0
18 031 003	31	330	1,70	250	200 Hz, 12.000 1/min	0,75	10,0
18 038 603*	38	310	1,00	250		0,27	10,0
18 050 603*	50	360	2,00	250		0,60	14,5
18 058 603*	58	370	2,50	250		0,83	16,0
18 065 603*	65	380	3,00	250		1,10	20,0
18 080 003	80	450	9,30	250		4,00	30,0

with 5 m hose, 15 m power cable, CEE plug and switch
*Also available with vulkollan cap on request at extra costs (please indicate when ordering)
ATTENTION: for comparison with other internal vibrator manufacturers, the indicated current is for the no-load condition (i. e. vibrator head hanging vertically and operating in free air). Under full-load conditions (i. e. vibrator head fully submersed in no-slump concrete), the current can be double the no-load current.

BRECON Spade grip pokers PROFI LINE 200 Hz, 42 V



Type	Head diameter [mm]	Head lenght [mm]	Nominal current [A]	Voltage [V]		Power [kW]	Weight [kg]
18 031 005	31	330	10,00	42	200 Hz, 12.000 1/min	0,75	5,4
18 038 605*	38	310	4,00	42		0,27	9,0
18 050 605*	50	360	10,00	42		0,60	13,0
18 058 605*	58	370	14,00	42		0,83	14,0
18 065 605*	65	380	18,00	42		1,10	18,0

with 1 m hose, 15 m power cable, CEE plug and switch
*Also available with vulkollan cap on request at extra costs (please indicate when ordering)
ATTENTION: for comparison with other internal vibrator manufacturers, the indicated current is for the no-load condition (i. e. vibrator head hanging vertically and operating in free air). Under full-load conditions (i. e. vibrator head fully submersed in no-slump concrete), the current can be double the no-load current.

3 Internal vibrator

BRECON Spare Heads for PROFI LINE



Type	Head diameter [mm]	Head lenght [mm]	Nominal current [A]	Voltage [V]		for type	Weight [kg]
18 031 051	31	330	10,00	42	200 Hz; 12.000 1/min	18 031 001 + 005	2,0
18 038 651*	38	310	4,00	42		18 038 601 + 605	2,0
18 050 651*	50	360	10,00	42		18 050 601 + 605	4,0
18 058 651*	58	370	14,00	42		18 058 601 + 605	6,0
18 065 651*	65	380	18,00	42		18 065 601 + 605	8,0
18 080 051*	80	450	55,00	42		18 080 001	13,0
18 031 053	31	330	1,70	250	200 Hz, 12.000 1/min	18 031 003	2,0
18 038 653*	38	310	1,00	250		18 038 603	2,0
18 050 653*	50	360	2,00	250		18 050 603	4,0
18 058 653*	58	370	2,50	250		18 058 603	6,0
18 065 653*	65	380	3,00	250		18 065 603	8,0
18 080 053*	80	450	9,3	250		18 080 003	13,0

* Also available with vulkollan cap on request at extra costs (please indicate when ordering)



Internal vibrator 3

BRECON Internal vibrator INTEQ 110 V or 230 V with integrated frequency converter



Type	Head diameter [mm]	Head lenght [mm]	Nominal current [A]	Voltage [V]		Power [kVa]	Weight [kg]
18 031 029	31	320	3,50	230	12.000 1/min	0,80	12,6
18 038 029	38	370	3,70	230		0,85	13,9
18 050 029	50	390	6,10	230		1,40	17,9
18 058 029	58	360	7,00	230		1,70	18,6
18 065 029	65	350	7,60	230		1,80	19,8
18 031 030	31	320	3,50	110	12.000 1/min	0,80	12,6
18 038 030	38	370	3,70	110		0,85	13,9
18 050 030	50	390	6,10	110		1,40	17,9
18 058 030	58	360	7,00	110		1,70	18,6
18 065 030	65	350	7,60	110		1,80	19,8

* With 5 m hose, 10 m power cable and schuko plug

BRECON Internal vibrator - pneumatic with 2 m hose



Type	Head diameter [mm]	Head lenght [mm]	Free air [l/min]	Air pressure [bar]	Weight [kg]
18 028 401	28	204	500	6 - 7 bar	4,4
18 035 401*	35	220	608		6,0
18 045 401*	45	252	736		8,0
18 055 401*	55	259	820		9,0
18 065 401*	65	277	1.018		10,0
18 075 401*	75	299	1.218		15,0
18 085 401	85	323	1.600		19,0
18 105 401	105	274	2.100		23,0
18 140 401	140	508	2.880		35,0
18 160 401	160	508	3.750		41,5

* Also available with vulkollan cap on request at extra costs (please indicate when ordering)

3 Internal vibrator

BRECON Mobile frequency converter electro-mechanical, 200 Hz, IP44



Type	Secondary				Primary		Transport	Weight
	Power output cos = 0,8 [kVa]	Voltage [V]	Nominal current [A]	Number of sockets	Power input [kVa]	Full load current [A]		[kg]
0 615 007 001	0,70	42	9,60	1	1~ 230 V	4,00	handle bar	14,5
0 615 007 251		250	1,60					
0 615 012 001	1,20	42	16,50	1	1~ 230 V	6,50	handle bar	17,8
0 615 012 251		250	2,80					
0 615 018 001	1,80	42	24,80	2	1~ 230 V	9,00	handle bar	27,0
0 615 018 251		250	4,10					
0 615 024 001	2,40	42	33,0	2	1~ 230 V	11,0	slide	37,0
0 615 024 251		250	5,50					
0 615 012 003	1,20	42	16,50	1	3~ 400 V	2,60	handle bar	16,7
0 615 012 253		250	2,80					
0 615 018 003	1,80	42	24,80	2	3~ 400 V	3,60	handle bar	27,0
0 615 018 253		250	4,10					
0 615 024 003	2,40	42	33,0	2	3~ 400 V	4,50	slide	28,0
0 615 024 253		250	5,50					
0 615 030 003	3,00	42	41,30	3	3~ 400 V	6,00	slide	46,0
0 615 030 253		250	6,80					
0 615 040 003	4,00	42	55,00	3	3~ 400 V	8,00	slide	48,0
0 615 040 253		250	9,00					
0 615 060 003	6,0	42	82,60	4	3~ 400 V	10,80	trolley	87,0
0 615 060 253		250	13,00					

With 1,5 m power cable and plug. Also available for other currents.
All converters have overload capacity and are overheat protected.
To determine the encessary size of the converter, add the power inputs (in kVa) of the vibrators that are to be run at the same time.
Choose the converter that is rated for the next larger power output (in kVa).

Internal vibrator 3

BRECON Mobile frequency converter electronic, 200 Hz, IP45



Type	Secondary				Primary		Transport	Weight
	Energy output [kVa]	Voltage [V]	Nominal current [A]	Number of sockets	Power input [kVa]	Full load current [A]		[kg]
EW578/1M58	1,50	42	30,00	1	1~ 230 V	14,00	handle bar	27,0
EW578/1N58		250	5,00			15,00		10,0
EW578/2M58	3,00	42	56,00	2	1~ 230 V	16,00	handle bar	37,0
EW578/2N58		250	10,00			16,00		11,0
EW578/2H58	5,5	42	56,00	2	3~ 400 V	20,00	handle bar	39,0
EW578/2K58		250	10,00			20,00		20,0
EW578/3H58	7,5	42	84,00	3	3~ 400 V	26,00	handle bar	39,00
EW578/3K58		250	15,00			26,00		24,0
EW578/4H58	11,0	42	112,00	4	3~ 400 V	35,00	trolley	67,0
EW578/4K58		250	20,00			35,00		24,0

With 4 m power cable and plug. Also available for other inputs/outputs.
All converters have overload capacity and are overheat protected.

3 Internal vibrator

BRECON Flexible shaft vibrators

Type	Centrifugal force [kN]	Head diameter [mm]	Total lenght [m]	Amplitude [mm]	Vibrations	Weight [kg]
18 028 910	2,0	28	1,0	0,9	12.000 per min.	2,8
18 028 915	2,0	28	1,5	0,9		2,5
18 028 920	2,0	28	2,0	0,9		2,2
18 028 925	2,0	28	2,5	0,9		2,3
18 028 930	2,0	28	3,0	0,9		2,4
18 028 935	2,0	28	3,5	0,9		2,5
18 038 910	3,5	38	1,0	1,1		3,5
18 038 915	3,5	38	1,5	1,1		3,6
18 038 920	3,5	38	2,0	1,1		3,7
18 038 925	3,5	38	2,5	1,1		3,8
18 038 930	3,5	38	3,0	1,1		3,9
18 038 935	3,5	38	3,5	1,1		4,0
18 045 910	3,8	45	1,0	1,6		3,7
18 045 915	3,8	45	1,5	1,6		3,8
18 045 920	3,8	45	2,0	1,6		3,9
18 045 925	3,8	45	2,5	1,6		4,0
18 045 930	3,8	45	3,0	1,6		4,1
18 045 935	3,8	45	3,5	1,6		4,2

BRECON Drive motors for flexible shaft vibrators

Type	Power input [kW]	Voltage [V]	Frequency [Hz]	Current [A]	Revoloution [1/min]	Weight [kg]
18 014 901	0,60	230	50	3,00	4.000	3,0
18 014 913	0,60	115	60	6,00	4.000	3,0

including handle bar, 10 m power cable and plug

Special vibrators 4

BRECON Direct current external vibrators 3.800 1/min, IP65



Type	Centrifu-gal force [kN]	Direct current [V]	Power [kW]	Nominal current [A]	Dimensions L x W x H [mm]	Mounting pattern l - b - d [mm]	Weight [kg]
18 961 302	1,4	12	0,15	12,60	198 x 165 x 125	115 x 135, 4x Ø10,5	4,9
18 961 303	1,4	24	0,15	6,30	198 x 165 x 125	115 x 135, 4x Ø10,5	4,9
18 961 306	1,6	12	0,16	13,20	198 x 165 x 125	115 x 135, 4x Ø10,5	5,1
18 961 307	1,6	24	0,16	6,60	198 x 165 x 125	115 x 135, 4x Ø10,5	5,1
18 961 304	2,2	12	0,17	13,80	198 x 165 x 125	115 x 135, 4x Ø10,5	5,3
18 961 305	2,2	24	0,17	6,90	198 x 165 x 125	115 x 135, 4x Ø10,5	5,3

With 2,5 m power cable, alternative mounting pattern: l=65; b=140; d=4x Ø13 included

BRECON ICF Vibrator 3.000/3.800 1/min,IP65

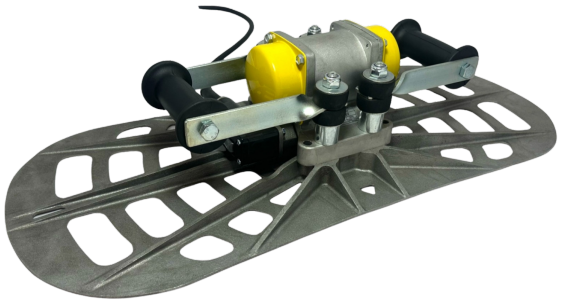

Type	Centrifugal force [kN]	Frequency [Hz]	Rotational speed [1/min]	Voltage [V]	Power [kW]	Nominal current [A]	Weight [kg]
18 903 001	1,4	50	3.000	3~ 400	0,15	0,27	11,5
18 903 010	1,4	50	3.800	1~ 230	0,27	1,80	11,5
18 903 013	1,4	60	3.800	1~ 115	0,27	1,80	11,50

With power cable, without plug

4 Special vibrators

BRECON Tampers
3.000/3.600 1/min, IP65

Type	Centrifugal force [kN]	Voltage 3~ [V]	Frequency [Hz]	Power [kW]	Nominal current [A]	Dimensions L x W x H [mm]	Weight [kg]
18 902 201	1,4	220-260 / 380-440	50	0,15	0,47 / 0,27	238 x 430 x 183	12,0
18 902 213	1,4	220-265 / 380-460	60	0,15	0,47 / 0,27	238 x 430 x 183	12,0
18 902 250	1,4	65 / 110	50	0,15	1,60 / 0,94	238 x 430 x 183	11,0
18 902 502	1,4	65 / 110	60	0,15	1,60 / 0,94	238 x 430 x 183	12,0

with 4 m power cable; without plug; supplied without accessories



BRECON Accessories
for tamping

Type	Total lenght [mm]	Foot print [mm]	Shank lenght [mm]	Shank diameter [mm]	Weight [kg]	Picture
1 618 603 301	560	round Ø72	100	35	1,9	1
1 618 603 302	560	100 x 80	100	35	2,0	2
1 618 603 303	560	150 x 150	100	35	4,0	3
1 618 603 304	560	200 x 35	100	35	1,8	4

Mounting patterner 5

Picture A

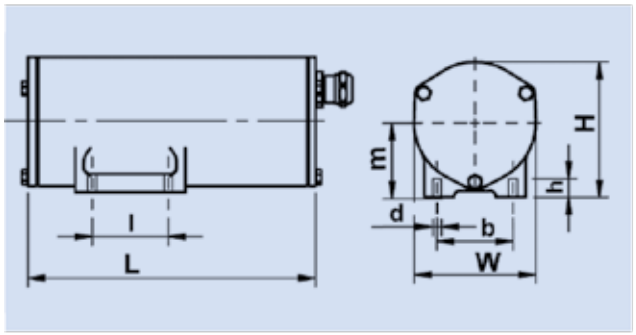

Picture D

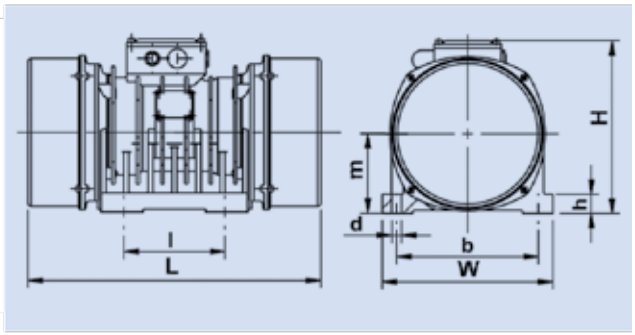

Picture B

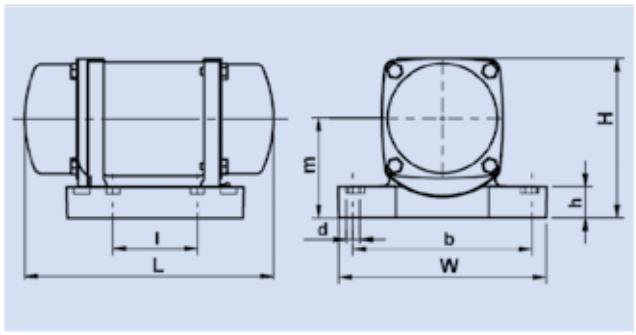

Picture E

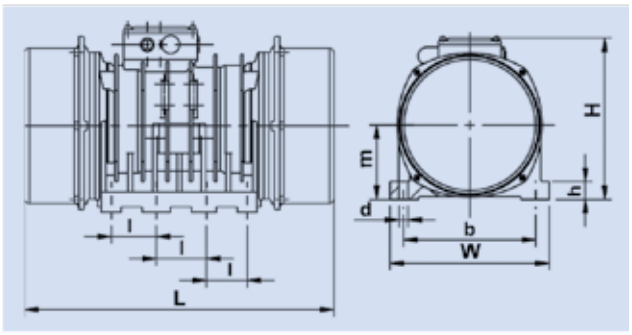

Picture C

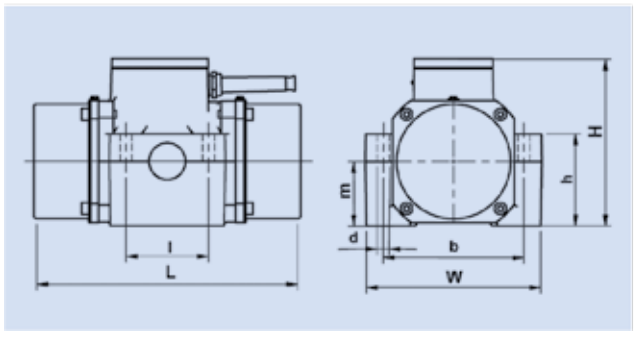

Picture F

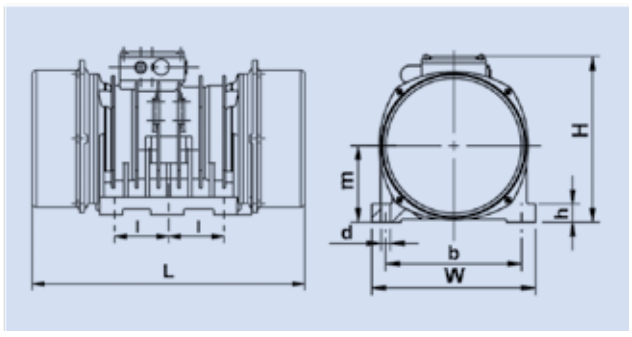



BRECON
Vibrationstechnik GmbH

Stolberger Str. 393
D-50933 Köln (Cologne)

Phone: +49 221 954427-0
Fax: +49 221 954427-7

info@brecon-vibration.com
www.brecon-vibration.com